VIETNAM NATIONAL UNIVERSITY, HO CHI MINH CITY
UNIVERSITY OF TECHNOLOGY
FACULTY OF ELECTRICAL AND ELECTRONIC ENGINEERING

Signal Processing

Laboratory Report: Lab 5

Z-Transform, Inverse Z-Transform, and LTI Systems

Instructor: Phạm Công Thái

Student: Lê Tiến Phát – 2252600

HO CHI MINH CITY, APRIL 2026

Contents

1 Exercise 1 – Impulse Response via Z-Transform **2**

2 Exercise 2 – Convolution via Z and Z^{-1} Transform **3**
2.1 (a) Finite-length sequences . . . 3
2.2 (b) Two causal geometric sequences . . . 3
2.3 (c) Mixed sequences . . . 3

3 Exercise 3 – Inverse Z-Transform **5**
3.1 (a) $X_1(z) = \dfrac{1}{2 - 3z^{-1} + z^{-2}}$ . . . 5
3.2 (b) $X_2(z) = \dfrac{1 + 2z^{-1} + z^{-2}}{1 + 4z^{-1} + 4z^{-2}}$ . . . 5
3.3 (c) $X_3(z) = \dfrac{1 + z^{-1}}{(1 - 0.5z^{-1})^2(1 - 0.3z^{-1})}$, ROC: $0.3 < |z| < 0.5$ . . . 6

4 Exercise 4 – First-Order LTI System **7**
4.1 (a) Block diagram . . . 7
4.2 (b) Impulse response . . . 7
4.3 (c) Step response . . . 7

5 Exercise 5 – Second-Order LTI System **8**
5.1 (a) Block diagram . . . 8
5.2 (b) Impulse response . . . 8
5.3 (c) Zero-input response . . . 8
5.4 (d) Zero-state response . . . 8

6 Exercise 6 – Z-Transform Properties (Proofs) **10**
6.1 (a) $\mathcal{Z}\{x^*(n)\} = X^*(z^*)$ . . . 10
6.2 (b) $\mathcal{Z}\{\mathrm{Re}\{x(n)\}\} = \frac{1}{2}[X(z) + X^*(z^*)]$ . . . 10
6.3 (c) $\mathcal{Z}\{\mathrm{Im}\{x(n)\}\} = \frac{1}{2j}[X(z) - X^*(z^*)]$ . . . 10
6.4 (d) $\mathcal{Z}\{e^{j\omega_0 n}\, x(n)\} = X(z\, e^{-j\omega_0})$ . . . 10

References **11**

1. Exercise 1 – Impulse Response via Z-Transform

Given: $y(n) - y(n-2) = x(n)$

Taking the Z-transform of both sides:

$$Y(z) - z^{-2}Y(z) = X(z)$$

$$Y(z)(1 - z^{-2}) = X(z)$$

The transfer function is:

$$H(z) = \frac{Y(z)}{X(z)} = \frac{1}{1 - z^{-2}} = \frac{z^2}{z^2 - 1} = \frac{z^2}{(z-1)(z+1)}$$

Partial fraction decomposition of $H(z)/z$:

$$\frac{H(z)}{z} = \frac{z}{(z-1)(z+1)} = \frac{A}{z-1} + \frac{B}{z+1}$$

Solving: $A = \dfrac{1}{1+1} = \dfrac{1}{2}, \quad B = \dfrac{-1}{-1-1} = \dfrac{1}{2}$

$$H(z) = \frac{1}{2} \cdot \frac{z}{z-1} + \frac{1}{2} \cdot \frac{z}{z+1}$$

Taking the inverse Z-transform (assuming causal system, ROC: $|z| > 1$):

$$\boxed{h(n) = \frac{1}{2}\left[1 + (-1)^n\right] u(n)}$$

This equals 1 for even $n \geq 0$ and 0 for odd n, which makes sense: the system is a "comb filter" that only passes even-indexed samples.

2. Exercise 2 – Convolution via Z and Z^{-1} Transform

2.1. (a) Finite-length sequences

$x_1(n) = \{\underset{\uparrow}{1}, 2, 3, 4, 5\}$ and $x_2(n) = \{\underset{\uparrow}{1}, 1, 1\}$

$$X_1(z) = 1 + 2z^{-1} + 3z^{-2} + 4z^{-3} + 5z^{-4}$$
$$X_2(z) = 1 + z^{-1} + z^{-2}$$

Multiplying directly (polynomial multiplication):

$$\begin{aligned} Y(z) &= X_1(z) \cdot X_2(z) \\ &= 1 + 3z^{-1} + 6z^{-2} + 9z^{-3} + 12z^{-4} + 9z^{-5} + 5z^{-6} \end{aligned}$$

$$\boxed{y(n) = \{\underset{\uparrow}{1}, 3, 6, 9, 12, 9, 5\}}$$

2.2. (b) Two causal geometric sequences

$x_1(n) = \left(\frac{1}{5}\right)^n u(n)$ and $x_2(n) = 2^n u(n)$

$$X_1(z) = \frac{z}{z - 0.2}, \quad X_2(z) = \frac{z}{z - 2}, \quad \text{ROC: } |z| > 2$$

$$Y(z) = \frac{z^2}{(z - 0.2)(z - 2)}$$

Partial fractions of $Y(z)/z$: $\dfrac{z}{(z - 0.2)(z - 2)} = \dfrac{A}{z - 0.2} + \dfrac{B}{z - 2}$

$A = \dfrac{0.2}{0.2 - 2} = -\dfrac{1}{9}, \quad B = \dfrac{2}{2 - 0.2} = \dfrac{10}{9}$

$$\boxed{y(n) = \left[-\frac{1}{9}\left(\frac{1}{5}\right)^n + \frac{10}{9} \cdot 2^n\right] u(n)}$$

2.3. (c) Mixed sequences

$x_1(n) = u(n)$ and $x_2(n) = 2^n u(n-1)$

$X_1(z) = \dfrac{z}{z - 1}$. For x_2: since $2^n u(n-1) = 2^n u(n) - \delta(n)$,

$$X_2(z) = \frac{z}{z - 2} - 1 = \frac{2}{z - 2}$$

$$Y(z) = \frac{2z}{(z - 1)(z - 2)}$$

Partial fractions: $A = \dfrac{2}{1 - 2} = -2, \quad B = \dfrac{2}{2 - 1} = 2$

$$\boxed{y(n) = 2(2^n - 1)\, u(n)}$$

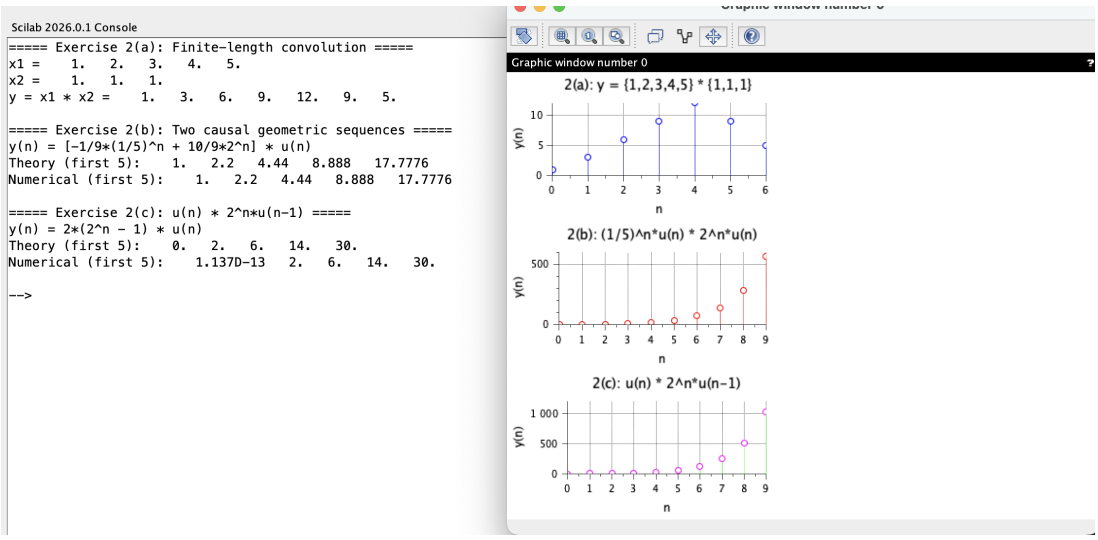

Figure 1: Convolution results verified in Scilab.

3. Exercise 3 – Inverse Z-Transform

3.1. (a) $X_1(z) = \dfrac{1}{2 - 3z^{-1} + z^{-2}}$

Multiply numerator and denominator by z^2:

$$X_1(z) = \frac{z^2}{2z^2 - 3z + 1} = \frac{z^2}{(2z-1)(z-1)} = \frac{z^2}{2(z-\frac{1}{2})(z-1)}$$

Partial fractions of $X_1(z)/z$:

$$\frac{z}{2(z-\frac{1}{2})(z-1)} = \frac{A}{z-\frac{1}{2}} + \frac{B}{z-1}$$

$A = \dfrac{\frac{1}{2}}{2(\frac{1}{2}-1)} = \dfrac{\frac{1}{2}}{-1} = -\dfrac{1}{2}, \quad B = \dfrac{1}{2(1-\frac{1}{2})} = 1$

Three possible signals depending on ROC:

Case 1: ROC: $|z| > 1$ (both causal)

$$\boxed{x_1(n) = \left[-\frac{1}{2}\left(\frac{1}{2}\right)^n + 1\right] u(n)}$$

Case 2: ROC: $|z| < \frac{1}{2}$ (both anti-causal)

$$\boxed{x_1(n) = \left[\frac{1}{2}\left(\frac{1}{2}\right)^n - 1\right] u(-n-1)}$$

Case 3: ROC: $\frac{1}{2} < |z| < 1$ (pole at $\frac{1}{2}$ is causal, pole at 1 is anti-causal)

$$\boxed{x_1(n) = -\frac{1}{2}\left(\frac{1}{2}\right)^n u(n) - u(-n-1)}$$

3.2. (b) $X_2(z) = \dfrac{1 + 2z^{-1} + z^{-2}}{1 + 4z^{-1} + 4z^{-2}}$

$$X_2(z) = \frac{z^2 + 2z + 1}{z^2 + 4z + 4} = \frac{(z+1)^2}{(z+2)^2}$$

Partial fractions of $X_2(z)/z$:

$$\frac{(z+1)^2}{z(z+2)^2} = \frac{A}{z} + \frac{B}{z+2} + \frac{C}{(z+2)^2}$$

At $z = 0$: $A = \dfrac{1}{4}$. At $z = -2$: $C = \dfrac{(-1)^2}{-2} = -\dfrac{1}{2}$. Comparing coefficients: $B = \dfrac{3}{4}$.

$$X_2(z) = \frac{1}{4} + \frac{3}{4} \cdot \frac{z}{z+2} - \frac{1}{2} \cdot \frac{z}{(z+2)^2}$$

Causal case (ROC: $|z| > 2$):

$$\boxed{x_2(n) = \frac{1}{4}\delta(n) + \frac{3}{4}(-2)^n u(n) - \frac{1}{2}n(-2)^{n-1}u(n)}$$

Anti-causal case (ROC: $|z| < 2$):

$$\boxed{x_2(n) = \frac{1}{4}\delta(n) - \frac{3}{4}(-2)^n u(-n-1) + \frac{1}{2}n(-2)^{n-1}u(-n-1)}$$

3.3. (c) $X_3(z) = \dfrac{1+z^{-1}}{(1-0.5z^{-1})^2(1-0.3z^{-1})}$, **ROC:** $0.3 < |z| < 0.5$

First, rewrite $X_3(z)$ in positive powers of z:

$$X_3(z) = \frac{z^3+z^2}{(z-0.5)^2(z-0.3)}$$

We perform partial fraction expansion on $X_3(z)/z$. The numerator degree (2) is strictly less than the denominator degree (3), so polynomial long division is **not** needed.

$$\frac{X_3(z)}{z} = \frac{z^2+z}{(z-0.5)^2(z-0.3)} = \frac{A}{z-0.3} + \frac{B}{z-0.5} + \frac{C}{(z-0.5)^2}$$

Solving for the coefficients:

$A = \left.\dfrac{z^2+z}{(z-0.5)^2}\right|_{z=0.3} = \dfrac{0.09+0.3}{(-0.2)^2} = \dfrac{0.39}{0.04} = 9.75$

$C = \left.\dfrac{z^2+z}{z-0.3}\right|_{z=0.5} = \dfrac{0.25+0.5}{0.2} = \dfrac{0.75}{0.2} = 3.75$

To find B, evaluate both sides at $z=0$:

$$0 = \frac{9.75}{-0.3} + \frac{B}{-0.5} + \frac{3.75}{0.25} \implies 0 = -32.5 - 2B + 15 \implies B = -8.75$$

Multiplying back by z:

$$X_3(z) = 9.75\,\frac{z}{z-0.3} - 8.75\,\frac{z}{z-0.5} + 7.5\,\frac{0.5\,z}{(z-0.5)^2}$$

Given the ROC $0.3 < |z| < 0.5$, the pole at 0.3 is causal and the double pole at 0.5 is anti-causal. Using the Z-transform pair $\dfrac{az}{(z-a)^2} \leftrightarrow n\,a^n\,u(n)$ for the causal case:

$$\boxed{x_3(n) = 9.75\,(0.3)^n\,u(n) + \left[8.75 - 7.5\,n\right](0.5)^n\,u(-n-1)}$$

4. Exercise 4 – First-Order LTI System

Given: $y(n) = 0.7\,y(n-1) + x(n)$

4.1. (a) Block diagram

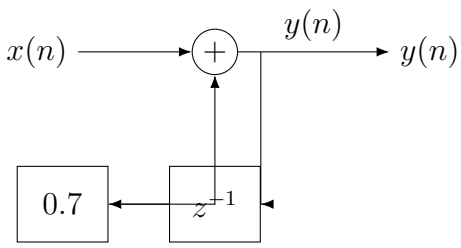

4.2. (b) Impulse response

$$H(z) = \frac{1}{1-0.7z^{-1}} = \frac{z}{z-0.7}, \qquad \text{ROC: } |z| > 0.7$$

$$\boxed{h(n) = (0.7)^n\,u(n)}$$

4.3. (c) Step response

When $x(n) = u(n)$: $Y(z) = H(z)\cdot X(z) = \dfrac{z^2}{(z-0.7)(z-1)}$

Partial fractions: $A = \dfrac{0.7}{0.7-1} = -\dfrac{7}{3}, \quad B = \dfrac{1}{1-0.7} = \dfrac{10}{3}$

$$\boxed{y(n) = \left[-\frac{7}{3}(0.7)^n + \frac{10}{3}\right] u(n)}$$

As $n \to \infty$, $y(n) \to 10/3 \approx 3.333$, which is the DC gain $H(1) = 1/(1-0.7) = 10/3$.

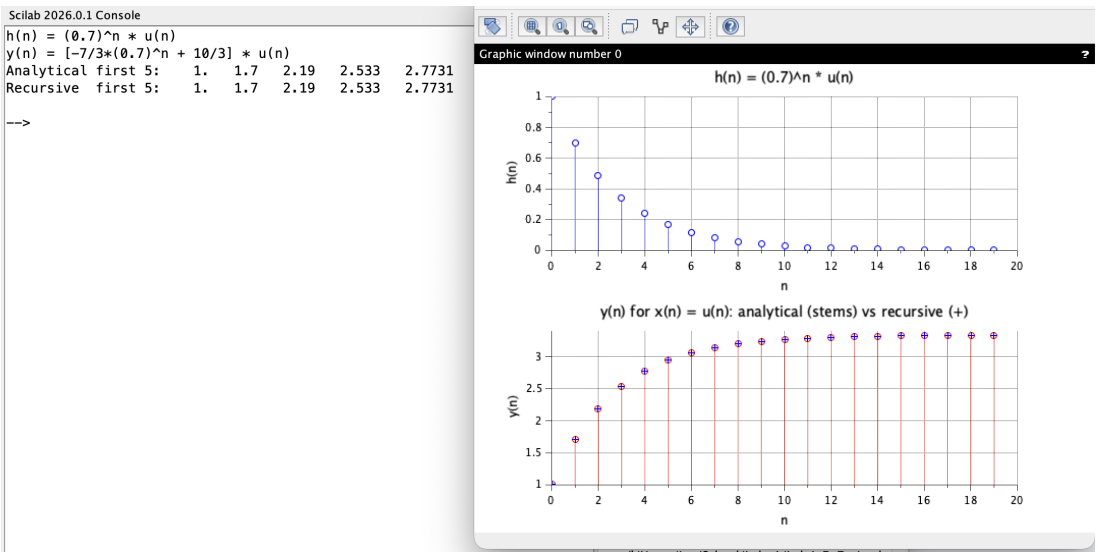

Figure 2: mpulse response h(n) and step response y(n), analytical vs recursive.

5. Exercise 5 – Second-Order LTI System

Given: $y(n) = 2\,y(n-1) - 3\,y(n-2) + x(n) + x(n-1)$

5.1. (a) Block diagram

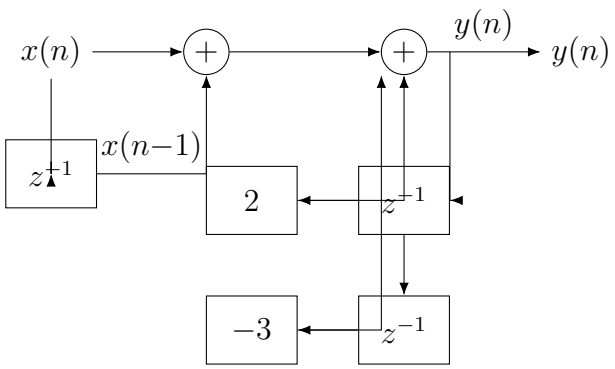

5.2. (b) Impulse response

$$H(z) = \frac{1 + z^{-1}}{1 - 2z^{-1} + 3z^{-2}} = \frac{z(z+1)}{z^2 - 2z + 3}$$

The poles are at $z = \dfrac{2 \pm \sqrt{4-12}}{2} = 1 \pm j\sqrt{2}$, with magnitude $|z| = \sqrt{3} \approx 1.732$.

Since $|z| > 1$, the system is **unstable** — the impulse response grows without bound. Converting to polar form: $z = \sqrt{3}\,e^{\pm j\theta}$ where $\theta = \arctan(\sqrt{2})$.

The impulse response is computed recursively in Scilab since closed-form involves growing oscillations.

5.3. (c) Zero-input response

With $y(-1) = y(-2) = 1$ and $x(n) = 0$:

$$y_{\text{zi}}(n) = 2\,y_{\text{zi}}(n-1) - 3\,y_{\text{zi}}(n-2)$$

First few values: $y_{\text{zi}}(0) = 2(1) - 3(1) = -1, \quad y_{\text{zi}}(1) = 2(-1) - 3(1) = -5$

5.4. (d) Zero-state response

With $x(n) = 2^n u(n)$ and zero initial conditions, the response is computed recursively:

$$y_{\text{zs}}(n) = 2\,y_{\text{zs}}(n-1) - 3\,y_{\text{zs}}(n-2) + 2^n + 2^{n-1}$$

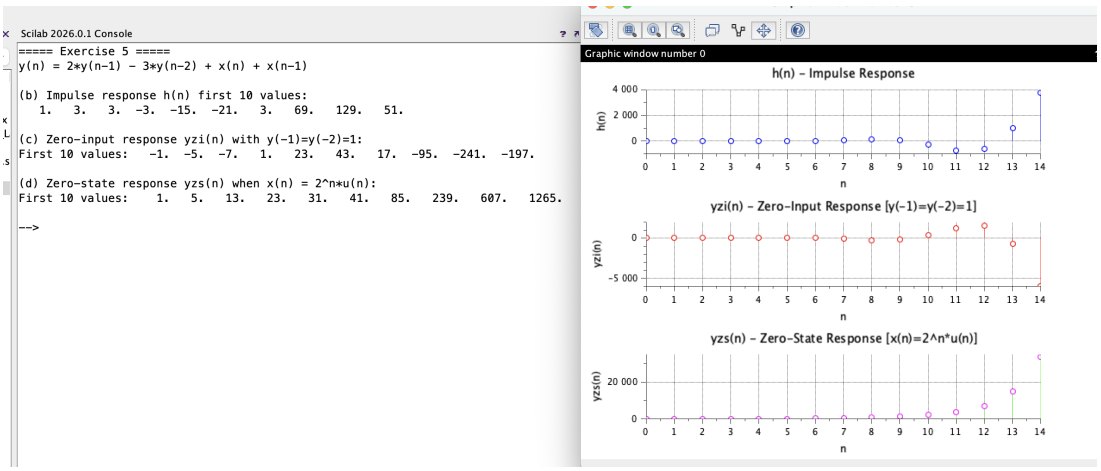

Figure 3: Three subplots: h(n), yzi(n), and yzs(n).

6. Exercise 6 – Z-Transform Properties (Proofs)

Let $x(n) \xrightarrow{\mathcal{Z}} X(z)$, so $X(z) = \sum_{n=-\infty}^{\infty} x(n)\, z^{-n}$.

6.1. (a) $\mathcal{Z}\{x^*(n)\} = X^*(z^*)$

$$\mathcal{Z}\{x^*(n)\} = \sum_n x^*(n)\, z^{-n} = \left[\sum_n x(n)\, (z^*)^{-n}\right]^* = X^*(z^*)$$

The key step uses the property that conjugation distributes over summation, and $(z^{-n})^* = (z^*)^{-n}$. ■

6.2. (b) $\mathcal{Z}\{\mathbf{Re}\{x(n)\}\} = \frac{1}{2}[X(z) + X^*(z^*)]$

Since $\mathrm{Re}\{x(n)\} = \dfrac{x(n) + x^*(n)}{2}$, by linearity of the Z-transform:

$$\mathcal{Z}\{\mathrm{Re}\{x(n)\}\} = \frac{1}{2}\mathcal{Z}\{x(n)\} + \frac{1}{2}\mathcal{Z}\{x^*(n)\} = \frac{1}{2}[X(z) + X^*(z^*)]$$

using the result from part (a). ■

6.3. (c) $\mathcal{Z}\{\mathbf{Im}\{x(n)\}\} = \frac{1}{2j}[X(z) - X^*(z^*)]$

Since $\mathrm{Im}\{x(n)\} = \dfrac{x(n) - x^*(n)}{2j}$:

$$\mathcal{Z}\{\mathrm{Im}\{x(n)\}\} = \frac{1}{2j}\mathcal{Z}\{x(n)\} - \frac{1}{2j}\mathcal{Z}\{x^*(n)\} = \frac{1}{2j}[X(z) - X^*(z^*)]$$

■

6.4. (d) $\mathcal{Z}\{e^{j\omega_0 n}\, x(n)\} = X(z\, e^{-j\omega_0})$

$$\begin{aligned}\mathcal{Z}\{e^{j\omega_0 n}\, x(n)\} &= \sum_n e^{j\omega_0 n}\, x(n)\, z^{-n} = \sum_n x(n)\, (z\, e^{-j\omega_0})^{-n} \cdot (e^{j\omega_0})^n \cdot (e^{-j\omega_0})^n \\ &= \sum_n x(n)\, (z\, e^{-j\omega_0})^{-n} = X(z\, e^{-j\omega_0})\end{aligned}$$

This is the frequency-shifting property: modulating by $e^{j\omega_0 n}$ in the time domain corresponds to replacing z with $z\, e^{-j\omega_0}$ in the Z-domain. ■

References

1. Scilab Online Help: `https://help.scilab.org`
2. GitHub repository with all Scilab source files: `https://github.com/Ixalis/DSP-Lab.git`

End of Report